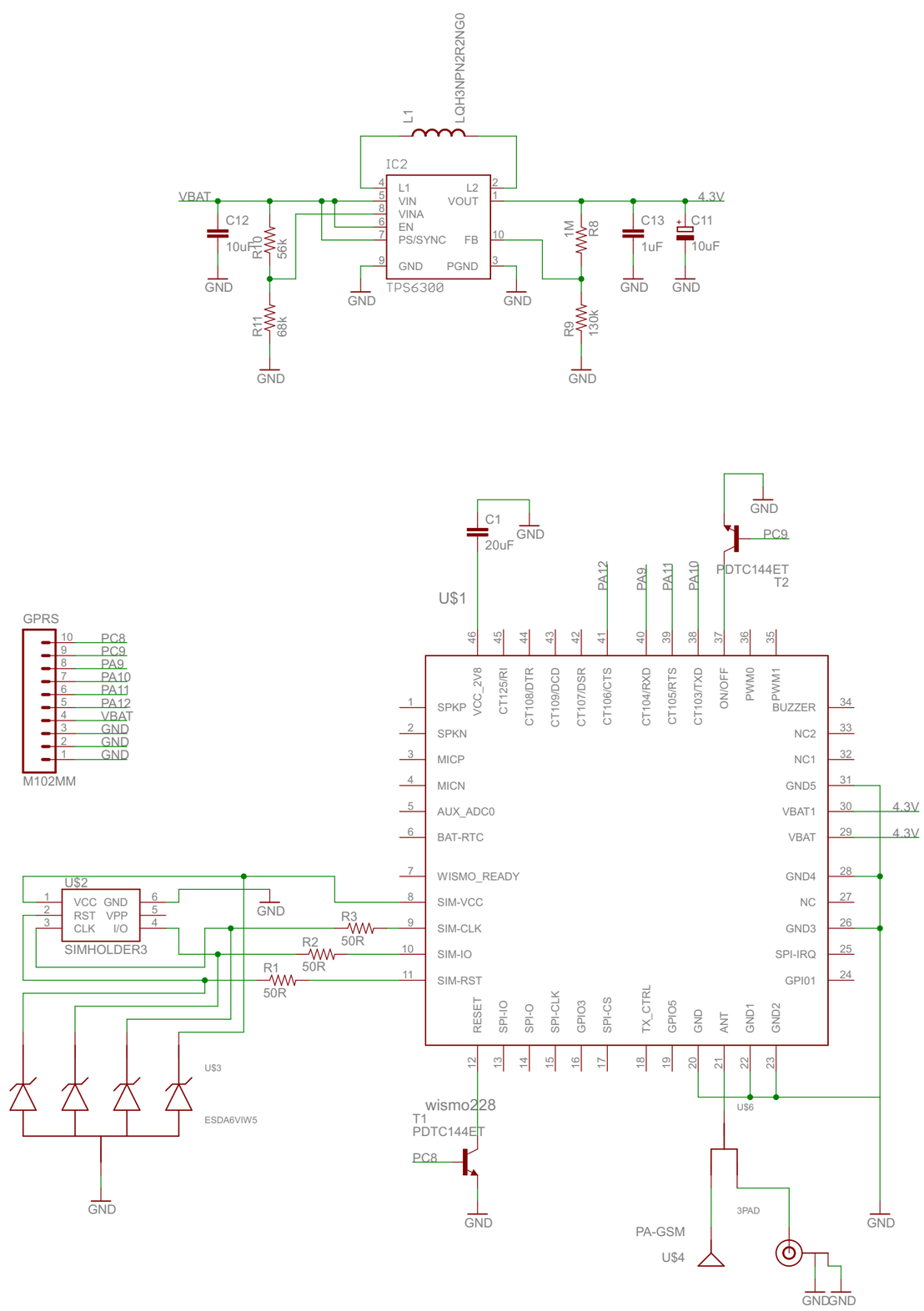
L1
LQH3NPN2R2NG0
IC2
L1
VIN
VINA
EN
PS/SYNC
GND
L2
VOUT
FB
PGND
TPS6300
VBAT
4.3V
C12
10uF
R10
56k
R11
68k
R8
1M
R9
130k
C13
1uF
C11
10uF
GND
C1
20uF
U$1
PDTC144ET
T2
PC9
GPRS
PC8
PC9
PA9
PA10
PA11
PA12
VBAT
GND
M102MM
VCC_2V8
CT125/RI
CT108/DTR
CT109/DCD
CT107/DSR
CT106/CTS
CT104/RXD
CT105/RTS
CT103/TXD
ON/OFF
PWM0
PWM1
SPKP
SPKN
MICP
MICN
AUX_ADC0
BAT-RTC
WISMO_READY
SIM-VCC
SIM-CLK
SIM-IO
SIM-RST
BUZZER
NC2
NC1
GND5
VBAT1
VBAT
GND4
NC
GND3
SPI-IRQ
GPIO1
RESET
SPI-IO
SPI-O
SPI-CLK
GPIO3
SPI-CS
TX_CTRL
GPIO5
GND
ANT
GND1
GND2
4.3V
U$2
VCC GND
RST VPP
CLK I/O
SIMHOLDER3
R3
50R
R2
50R
R1
50R
U$3
ESDA6VIW5
wismo228
T1
PDTC144ET
PC8
U$6
3PAD
PA-GSM
U$4